Application of Operational Effectiveness Models in Naval Ship Concept Exploration and Design

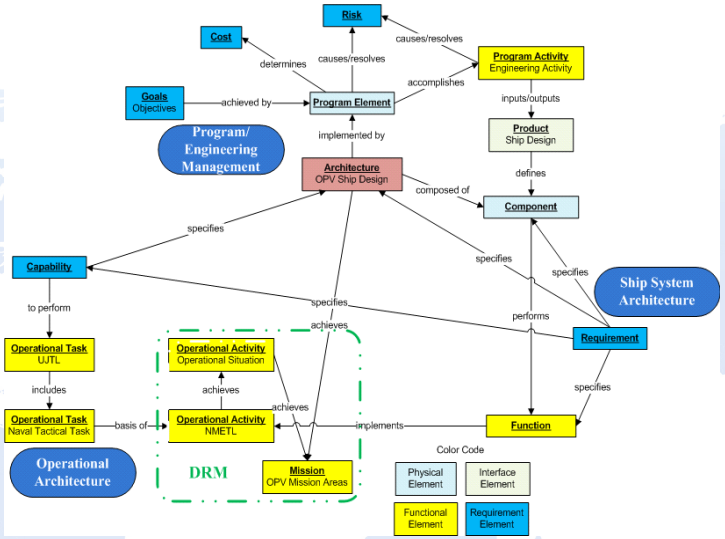

Alan J. Brown, PhD, CAPT USN(ret)

NAVSEA Professor

Virginia Polytechnic and State University

"Wicked" Problem

Source: Requirements Elucidation, Andrews, 2012

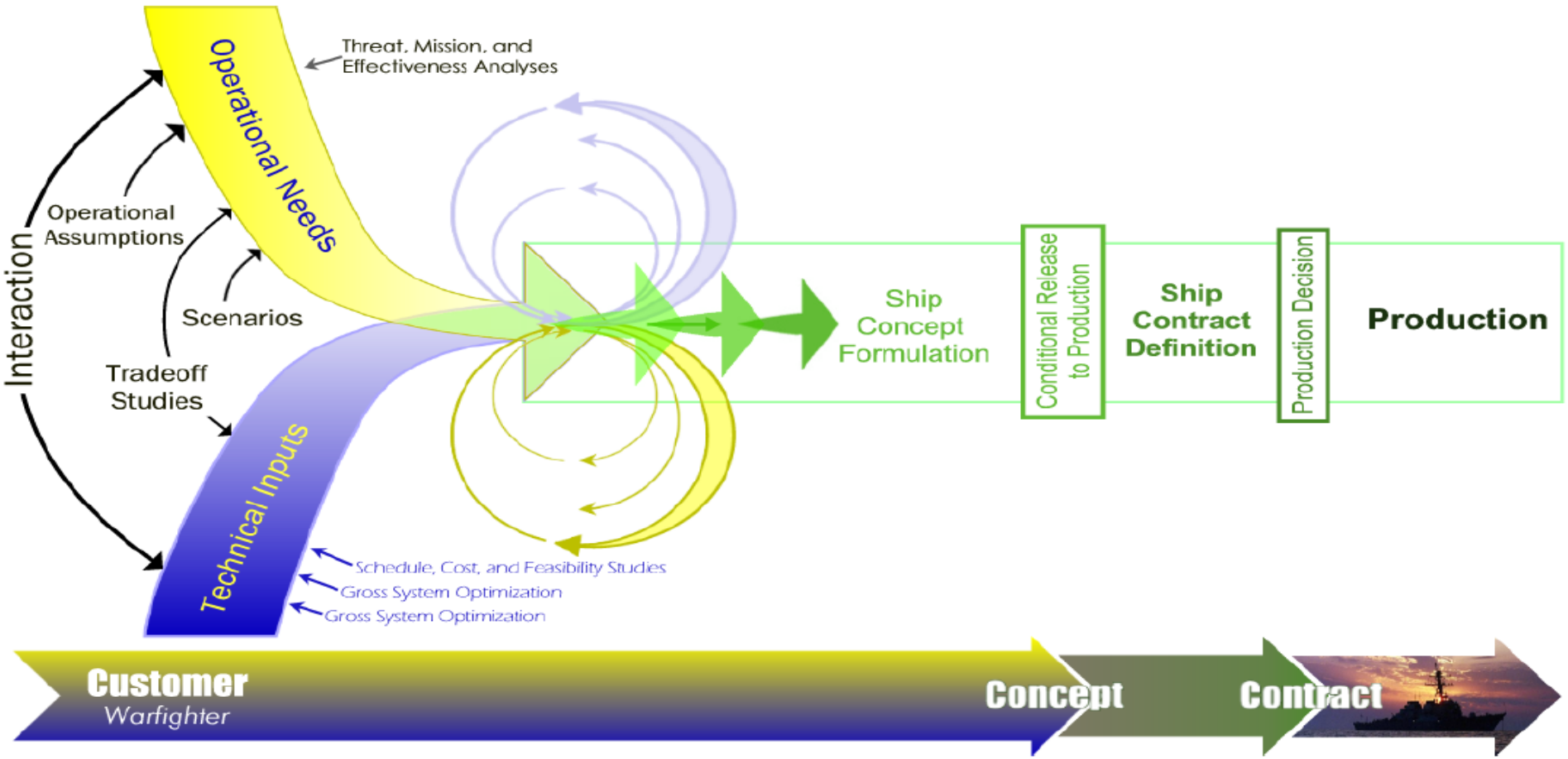

Source: Jons, 2012

C&RE Process

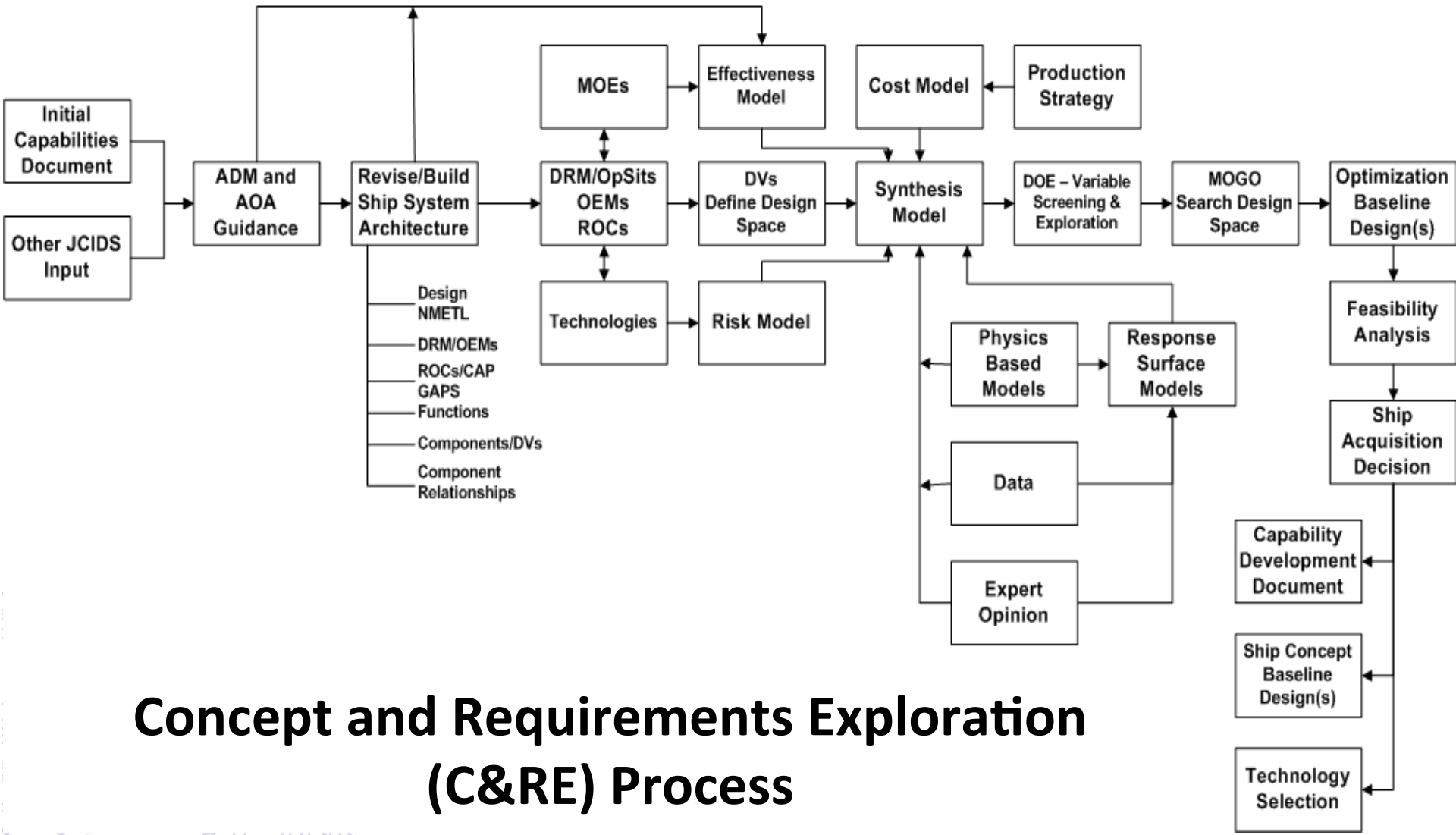

Concept and Requirements Exploration (C&RE) Process

OMOE Hierarchy

Overall Measure of Effectiveness

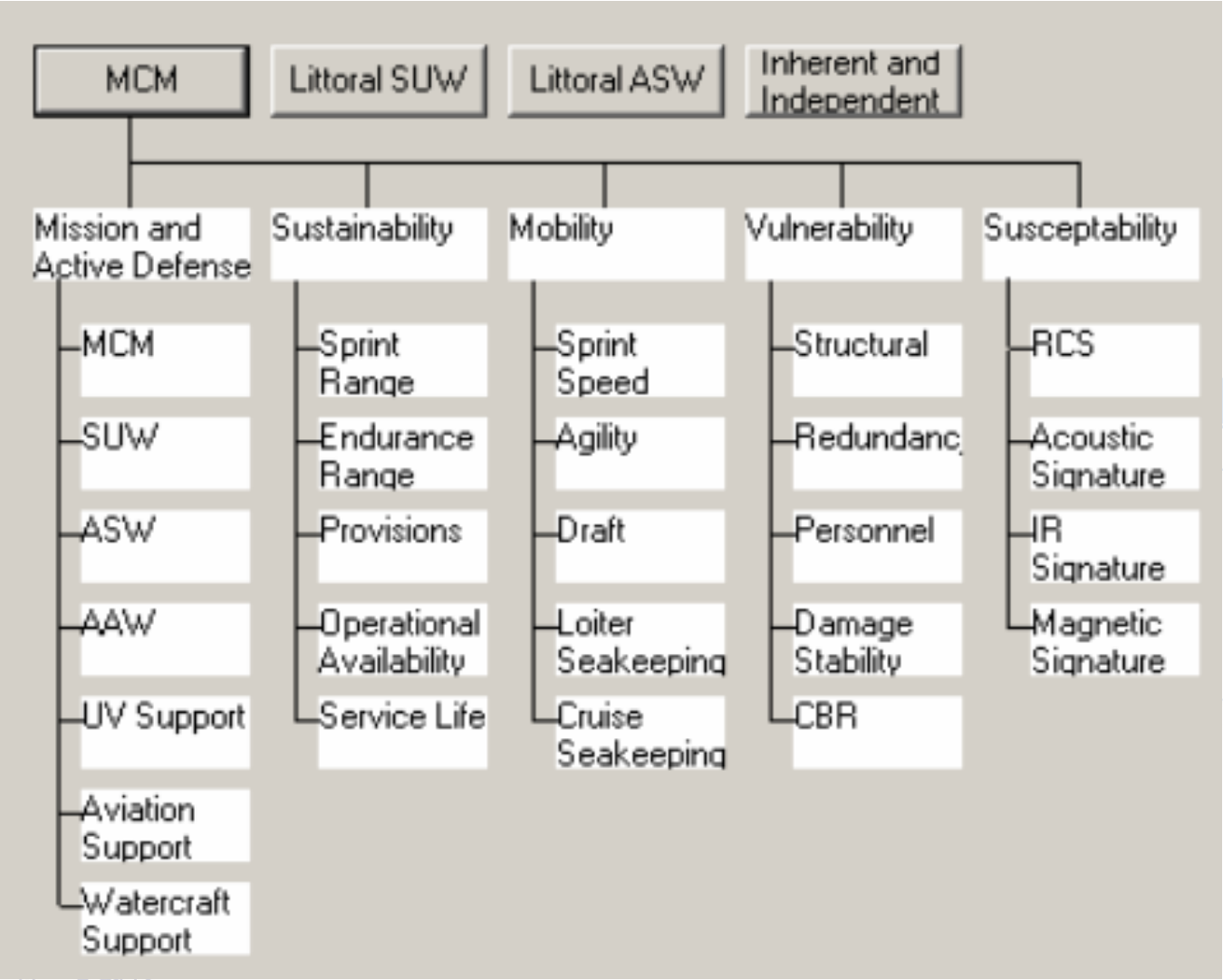

Non-Dominated Frontier

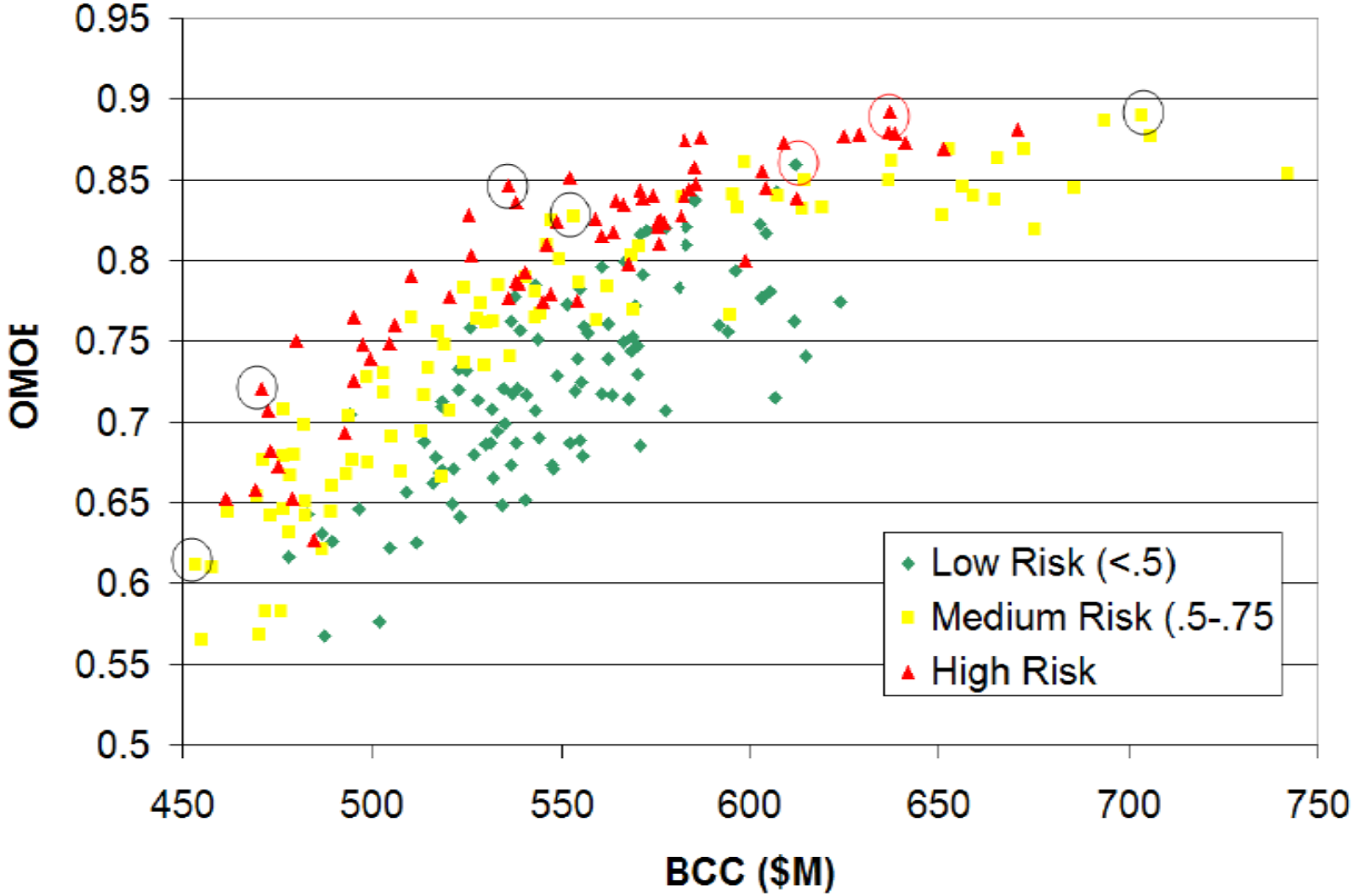

Ship Design Architecture

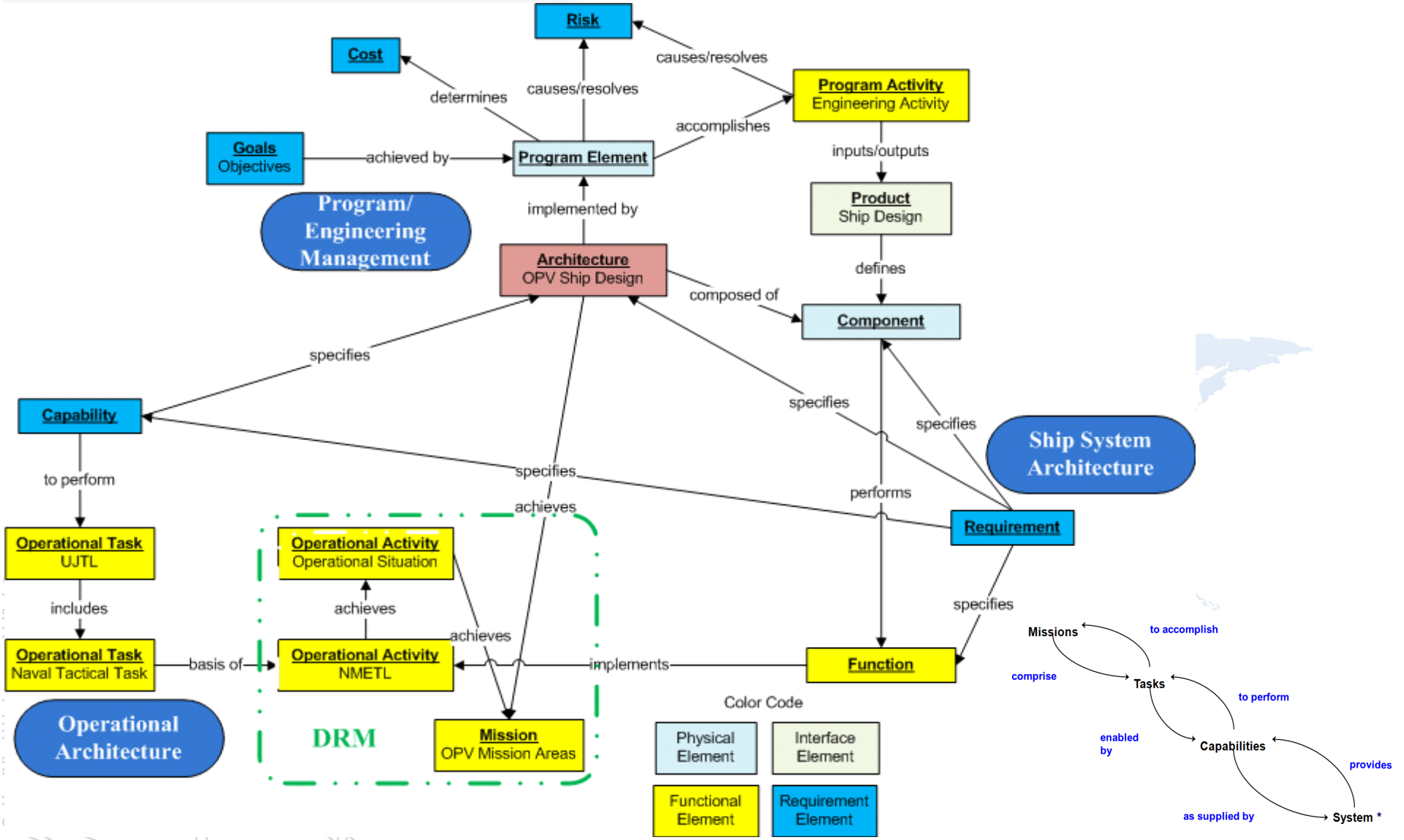

Design Reference Mission

- Mission Type(s)
- Concept of Operations (CONOPs)
- Projected threat and operating environment (POE)
- JCAs / ROCs - capabilities
- Design-driving operational elements (NMETL)
- Operational Situations (OpSits) - feature selected operational characteristics, or combinations thereof, for each mission type, in operationally viable combat situations that drive the design

Universal Naval Task List

Universal Naval Task List (UNTL), OPNAVINST 3500.38

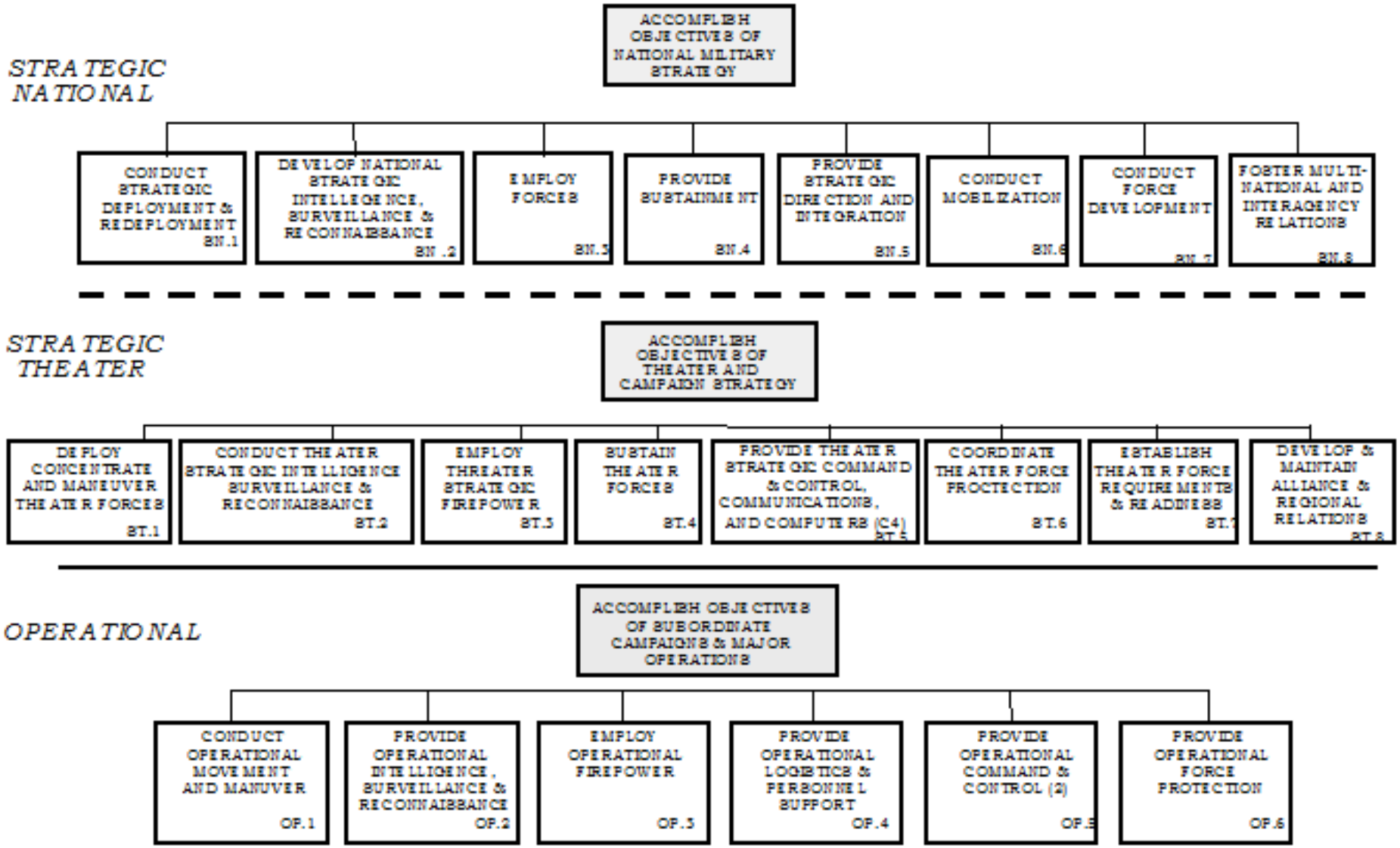

NMETs

Naval Mission Essential Tasks (NMET)

Number	Name	Description
NMETL.4.7.9	Provide Environmental Disaster Relief Support	Task includes the transport and deployment of clean-up materials, control/clean-up of hazardous releases, and decontamination. It also includes providing messing, berthing, and hotel services for other agency workers, and providing command and control facilities. In addition, the task covers the management of contaminated materials and, if required, the transport and evacuation of personnel.
NMETL.4.13.6	Perform Emergency Towing	
NMETL.6.2.3	Perform Rescue and Recovery	To employ aircraft, surface ships, submarines, specialized rescue teams, and equipment for search and rescue (SAR) of personnel in distress on land or at sea.
NMETL.6.2.3	Perform Rescue and Recovery (SAR Helo)	To employ aircraft, surface ships, submarines, specialized rescue teams, and equipment for search and rescue (SAR) of personnel in distress on land or at sea.
NMETL.6.2.3	Perform Rescue and Recovery (SAR Ship)	To employ aircraft, surface ships, submarines, specialized rescue teams, and equipment for search and rescue (SAR) of personnel in distress on land or at sea.
NMETL.6.3.2.3	Manage Refugees - (SAR)	To collect, process, evaluate, safeguard, house, and release refugees. This task may include determination of political asylum status.
NMETL.6.4	Provide Disaster Relief	To deliver disaster relief, including personnel and supplies, and provide a mobile, flexible, rapidly responsive medical capability for acute medical and surgical care.
OpSit.2	Search and Rescue (SAR)	Operational Situation to define the typical sequence of subsequent activities/tasks required to achieve the SAR Mission.

NMET Metrics

Name: NMET 1.4.8.2 Conduct Maritime Counter Drug Operations.

Number: NMETL.1.4.8.2

Description: To coordinate with all applicable agencies to detect and monitor vessel and air traffic and provide vessels and qualified boarding teams to intercept, board, inspect, search, and as appropriate seize, vessels suspected of smuggling drugs. (JP 1, 3-0, 3-07, 3-07.4, NDP 1, NWP 3-07, 3-07.4, Coast Guard Maritime Law Enforcement Manual (COMDTINST M16247.1))

M1	Incidents	Of unresolved crimes.
M2	Number	Prisoners held in confinement.
M3	Lb.	Of drugs confiscated or destroyed per week.
M4	Incidents	Of crime reported per week.
M5	Percent	Of vessels correctly identified and located.
M6	Number	Of targets accurately identified and located.
M7	Number	Vessels intercepted.
M8	Percent	Of vessels turned back.
M9	Number	Vessels seized.
M10	Percent	Surveillance area coverage (area covered/area assigned).
M11	Percent	coverage factor (sweep width/track spacing).
M12	Percent	Cumulative Probability of Detection.
M13	Percent	Intercept Rate (# of interceptions/# of intercepts attempted).
M14	Percent	Boarding Rate (# of Targets of Interest boarded/ total # of Targets of Interest).

Main Attributes | Secondary

Relationships

- achieved by
- achieves
- assigned to
- augmented by
- categorized by
- documented by
- enabled by
- included in
- includes
- refined by
- refines
- reported by

Targets & Attributes

- Position: 1
- Condition 1.2.1.3 Sea State
  - Position: 1
- Condition 1.2.1.6 Ocean Features
  - Position: 1
- Condition 1.2.6 Shipping Presence
  - Position: 1
- Condition 1.3.1.3 Weather
  - Position: 1
- Condition 1.3.2 Visibility
  - Position: 1

Sort: Numeric by class

OpSit FFBD

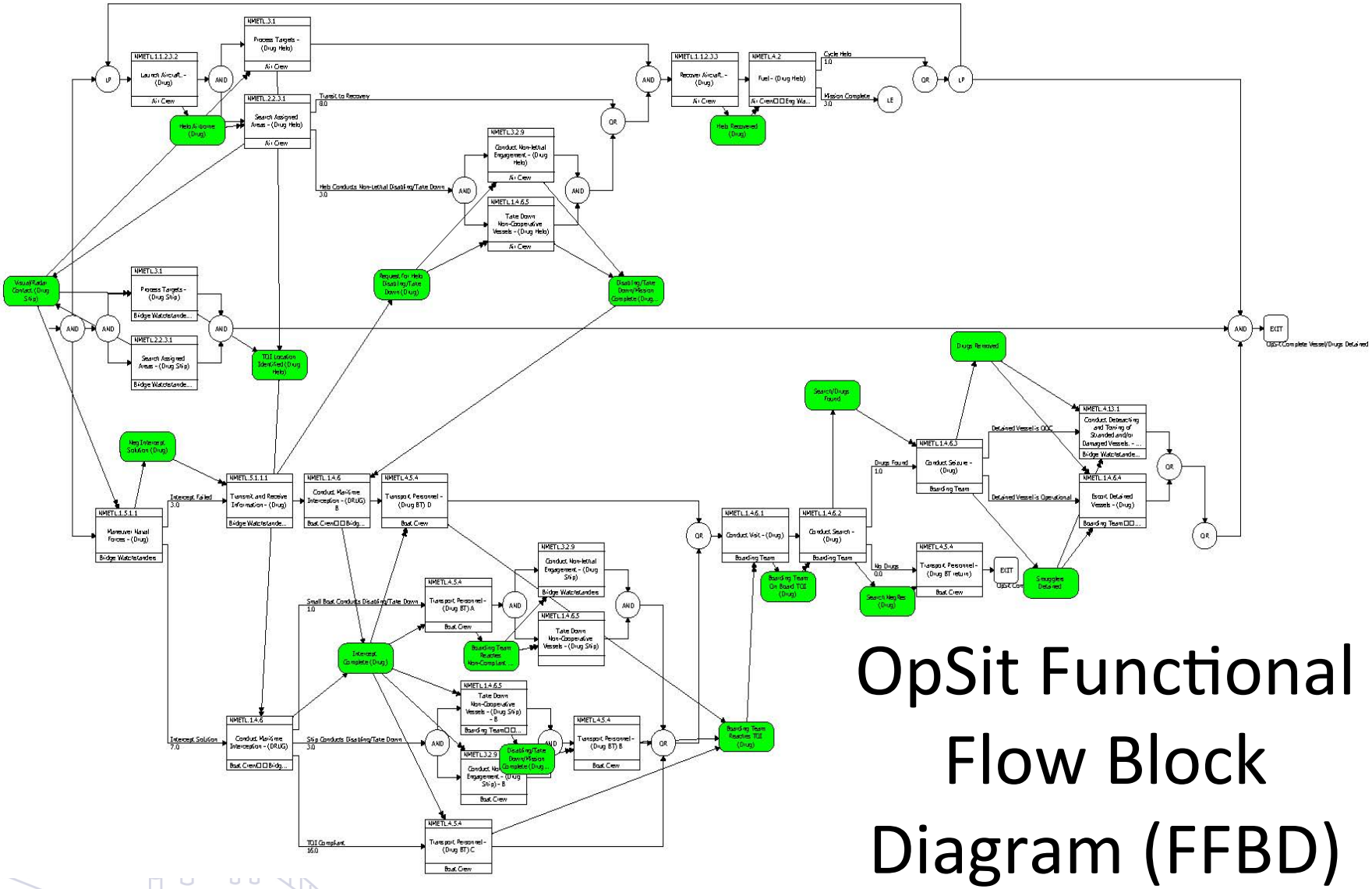

OpSit Functional Flow Block Diagram (FFBD)

OpSit FFBD (2)

Drug Interdiction (DRUG) OpSit FFBD – Upper Branch - Helo

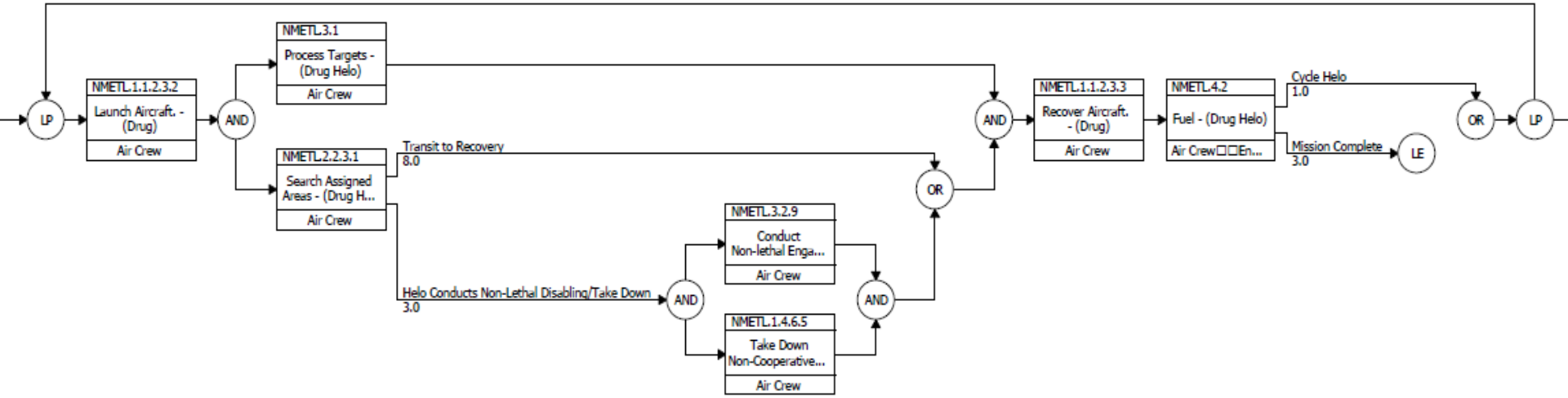

Scenario Detail

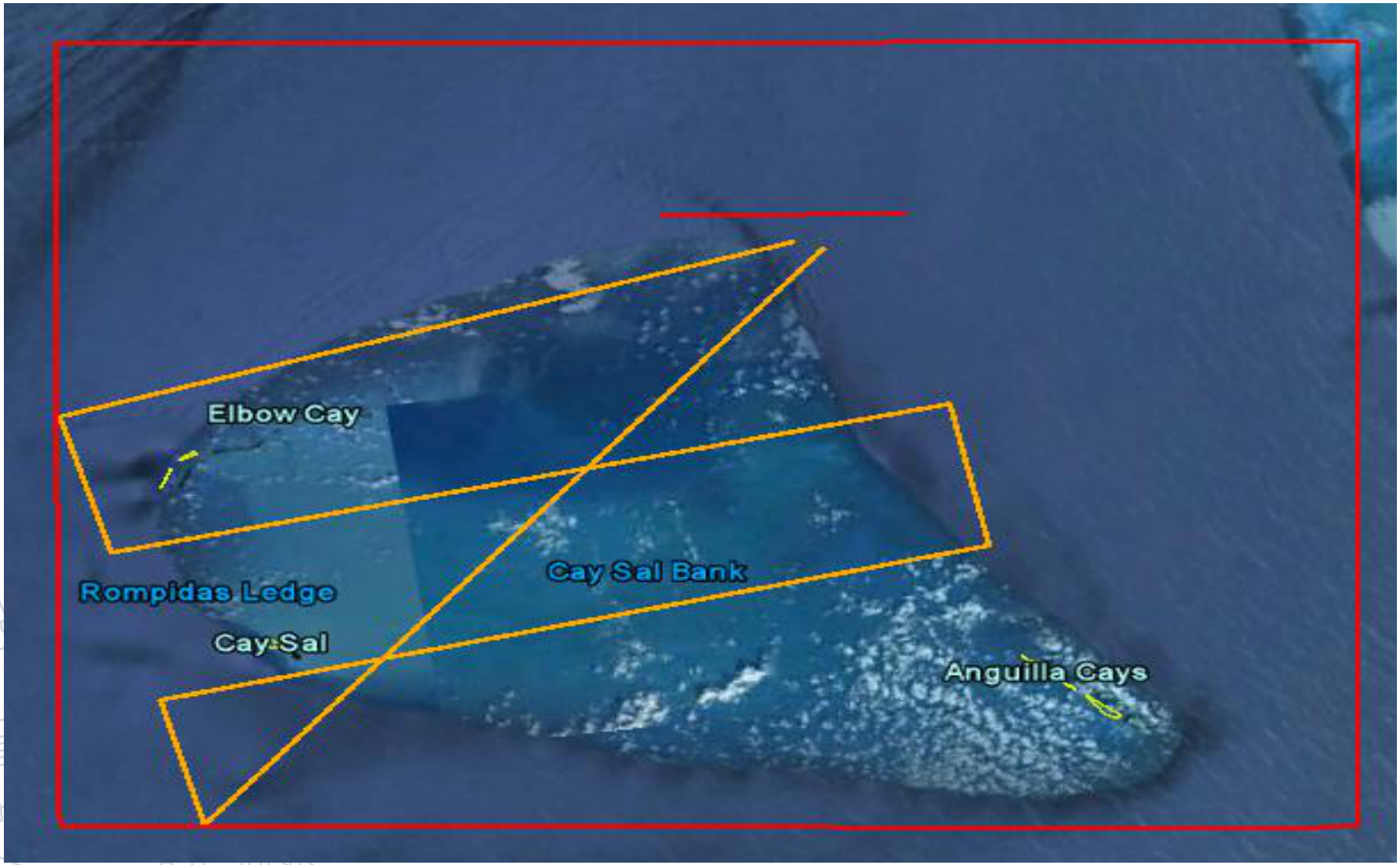

ExtendSIM Model

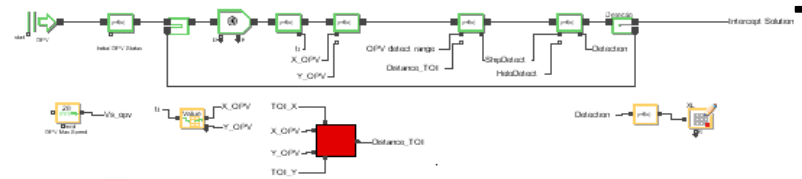

OPV Navigation Loop

Intercept Solution Calculations

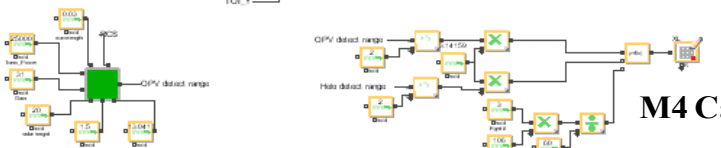

M4 Calculations

Detection Range

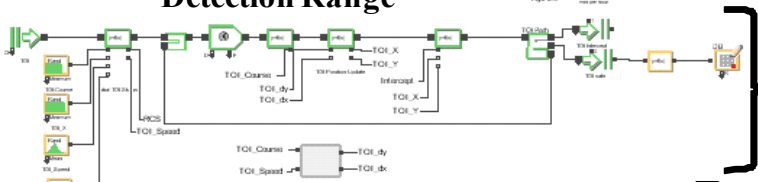

TOI Navigation Loop

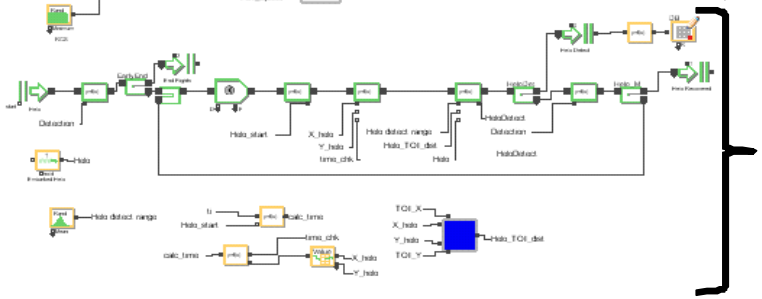

Helicopter Navigation Loop

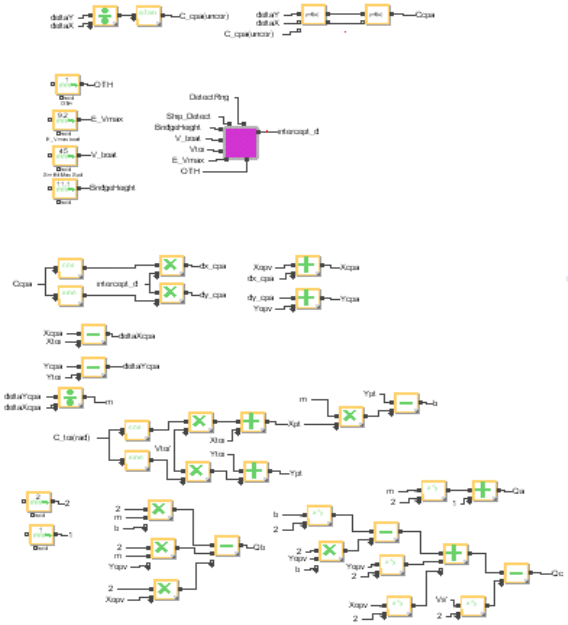

Intercept Solution Loop

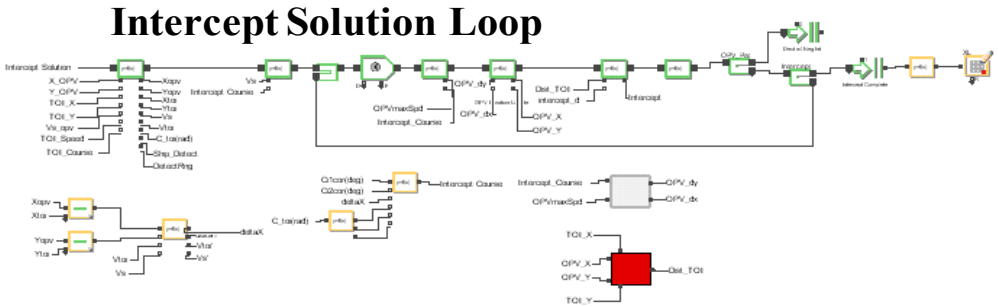

OMOE (2)

Overall Measure of Effectiveness Hierarchy

Questions

- Will the early application of a Total Ship Design System Architecture add value to the Ship Design Process?
- Can it be used to derive a Design Reference Mission (DRM) and Design Metrics?
- Can it be used to select and design OEMs?
- Are OEMs necessary or is Expert Opinion approach sufficient/preferred? Advantage for V&V?
- What is the impact of DRM/OpSit/OEM scope, complexity, doctrine, tactics, Rules of Engagement (ROE), POE and specific details to correctly rank design alternatives and drive designs?
- What effectiveness metrics (MOEs) should be used? How sensitive are OEM results to metric selection?
- Can MOEs rationally be collected into a single OMOE?
- Is it worth the effort?